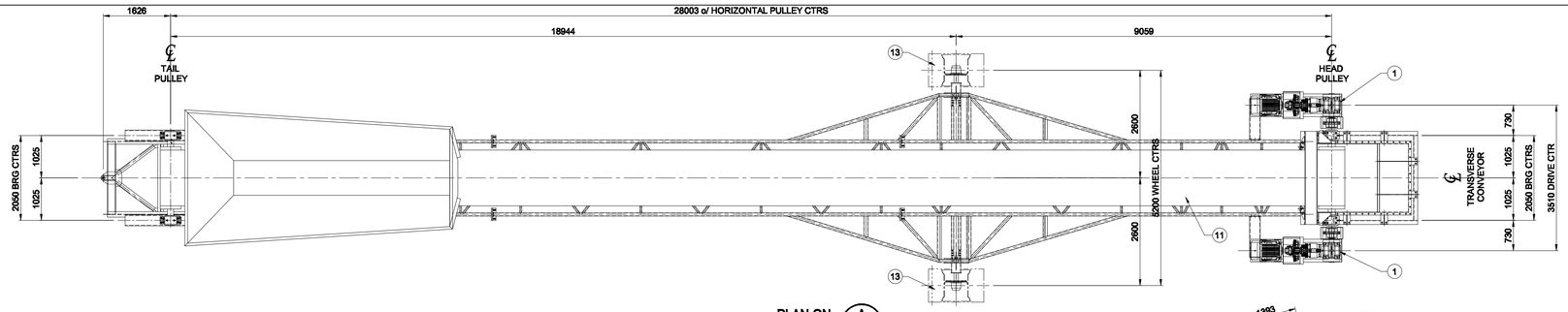

PLAN ON A

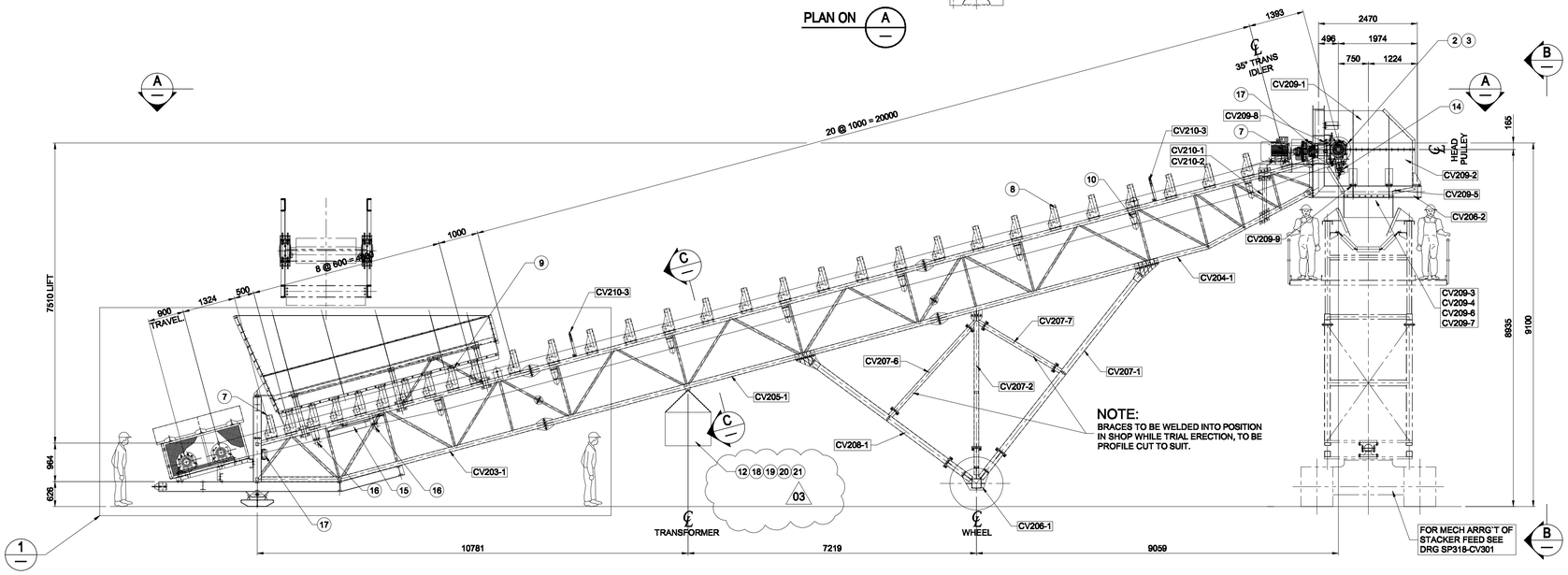

NOTE:
BRACES TO BE WELDED INTO POSITION IN SHOP WHILE TRIAL ERECTION, TO BE PROFILE CUT TO SUIT.

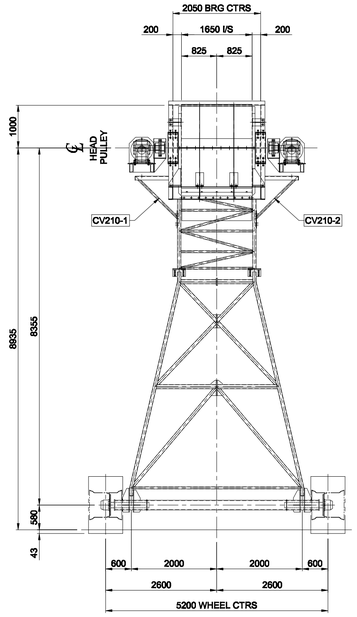

VIEW ON B

ELEVATION ON TRANSVERSE CONVEYOR

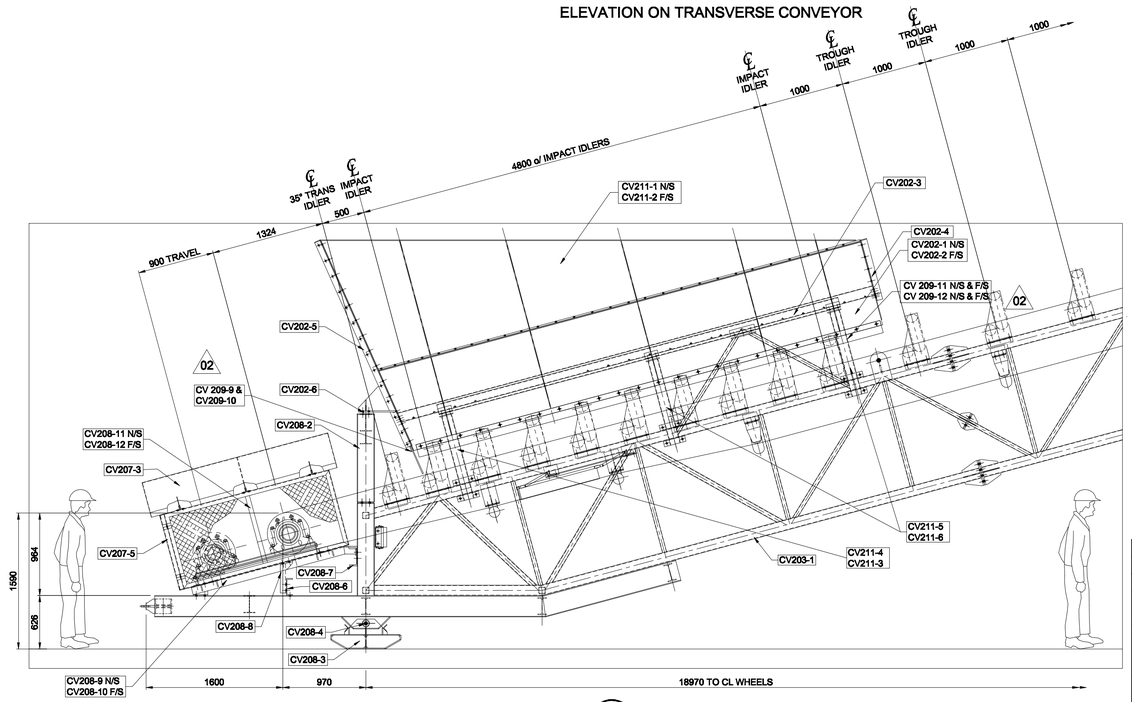

DETAIL 1

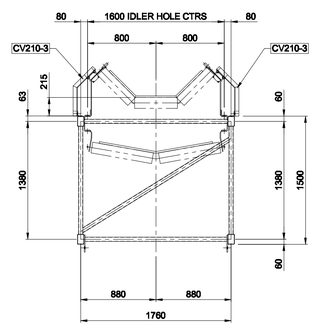

SECTION C

MECHANICAL SCHEDULE (1350 BELT)

ITEM	QTY	DESCRIPTION
1	2	BAUER DRIVES (ONE - LH) BK80-11U-SN c/w (ONE - RH) BK80-12U-SN FXRV85-65 BACKSTOP. FLUID COUPLING BIBBY 60K2 FRV7 MOTOR 75 KW - 4- POLE WEG. SEE BAUER DRG 06-0036/2 RIGID COUPLING 30/230/270/400 (110mm / 140mm).
2	ONE	HEAD PULLEY: Ø630 x 1500 FACE, 190/170 SHAFT
3	2	SNL 3138 BEARING Ø170 SHAFT
4	ONE	TAIL PULLEY: Ø500 x 1500 FACE, 170/150 SHAFT
5	2	SNL 3134 BEARING Ø150 SHAFT
6	ONE	KT36 SCREW TAKE-UP (900 TRAVEL)
7	2	35° TRANSITION IDLER. 3-ROLL OFFSET SERIES 25/32 152 Ø ROLLER (SE-URS-TR-5412)
8	20	45° TROUGHING IDLER. 3- ROLL OFFSET SERIES 25/32 152 Ø ROLLER (SE-URS-TR-5405)
9	9	45° IMPACT IDLER. 3- ROLL OFFSET SERIES 25/32 152 Ø ROLLER (SE-URS-TR-5406)
10	8	VEE RETURN IDLER. 10° - 2- ROLL SERIES 25/32 127 Ø ROLLER (SE-URS-TR-5403)
11	61 m	1350 WIDE BELT (INCLUDING SPLICES) PLIED CLASS 630/3 PLY
12	ONE	TRANSFORMER 11kV/0,415 kV, OIL COOLED OAM (1450L x 950 W x 830 H MASS 850Kg)
13	2	WHEEL ASSEMBLY : DISC 28.00 x 26.5 TYRE WIDTH : 800 mm UNLOADED DIM. : 1333 mm LOADED DIM. : 580 mm
14	1	SCORPIO SECONDARY SCRAPER
15	1	BRELKO E-401 RETURN BELT PLOUGH
16	2	90 DROP SINGLE ROLL FLAT RETURN IDLER SERIES 25 127 Ø ROLLER
17	4	GUIDE ROLLS. 6205-2RS BRG (SE-URS-TR-5407)
18	4	SIZE 6 TURNBUCKLE
19	8	SIZE 6 D SHACKLES WITH SCREW PIN
20	2	OBLONG MASTER LINK
21	2m	SIZE 6 SSL CHAIN

03

01 ALL QUANTITIES ARE FOR ONE TRANSFER CONVEYOR ONLY
2 - TRANSFER CONVEYORS REQUIRED

DRG No.	DESCRIPTION
CV 211	TAIL CHUTE DETAILS
CV 210	HEAD GANTRY DETAILS
CV 209	HEAD CHUTE DETAILS
CV 208	TRESTLE DETAILS
CV 207	TRESTLE DETAILS
CV 206	HEAD FRAME & AXLE DETAILS
CV 205	MIDDLE GANTRY DETAILS
CV 204	HEAD GANTRY DETAILS
CV 203	TAIL END GANTRY DETAILS
CV 202	**TAIL CHUTE DETAILS**

REFERENCE DRAWINGS

REV	DATE	DESCRIPTION	BY	CHKD	APPR
03	16/10	ITEMS 18 TO 21 ADDED	K.P.		
02	03/08	RUBBER SKIRTS ADDED	K.P.		
01	12.07.07	CORRECTION TO QUANTITY	R.M.	B.M.	H.B.
00		ISSUED FOR FABRICATION	K.P.	B.M.	H.B.

REVISIONS

THIS DRAWING IS COPYRIGHT IN TERMS OF THE COPYRIGHT ACT.

APPROVAL	SIGNATURE	DATE
CLIENT		
PROJECT MANAGER	T.C.	10/05/07
D.O. MANAGER	P.P.	10/05/07
DISCIPLINE ENGINEER	B.J.	10/05/07
SECTION LEADER	H.B.	10/05/07
CHECKED / INTERFACE	B.M.	09/05/07
DRAWN	K. PHILLIPS	28/03/07

SENET
Senet House
187 Van Riebeeck Avenue
Edenvale
1610
Tel: 27 11 609 2143
Fax: 27 11 452 1130
Email: Drawingoffice@senet.co.za

TREKKOPJE
MECHANICAL ARRANGEMENT OF TRANSVERSE CONVEYOR

A0	SCALE	PROJECT No.	DRAWING No.	REVISION
	1:50	SP 318	CV 201	03